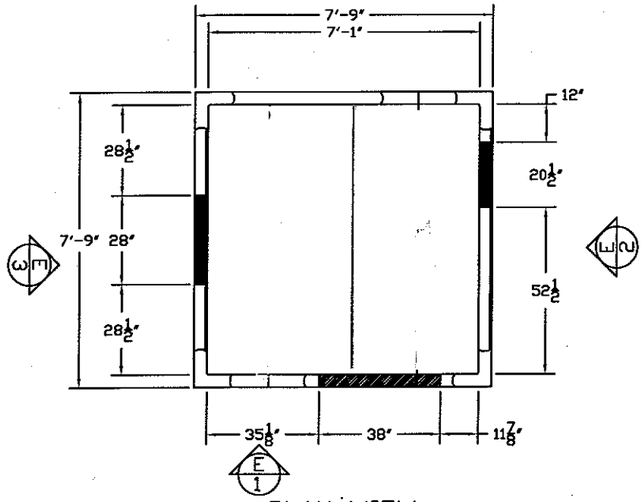

PLAN VIEW

NOMINAL 8' X 8' X 9'-6 1/2" INDOOR MODULAR STRUCTURE WITH 14 GAUGE GALVANIZED FLOORS

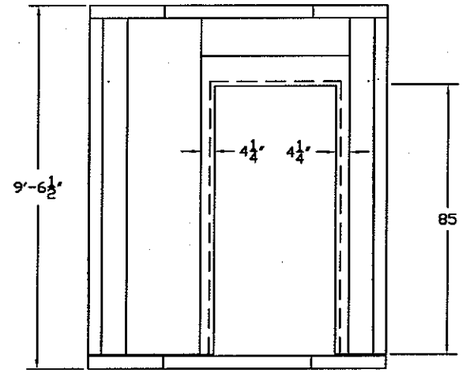

38" X 85" NET OPENING WITH OLD STYLE GRAY TRIM & REINFORCEMENT

E 1 EXTERIOR ELEVATION

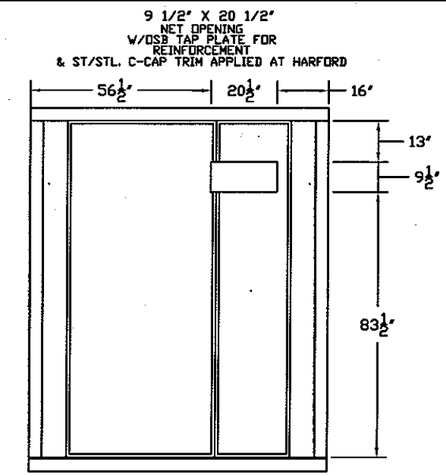

E 2 EXTERIOR ELEVATION

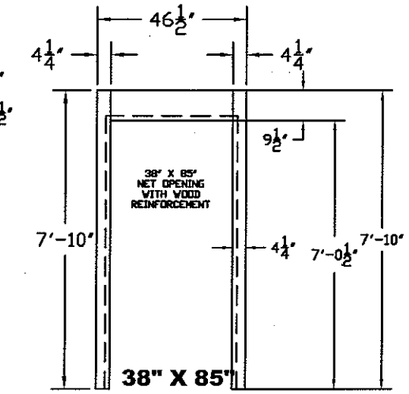

38" X 85" NET OPENING WITH OLD STYLE GRAY TRIM & REINFORCEMENT

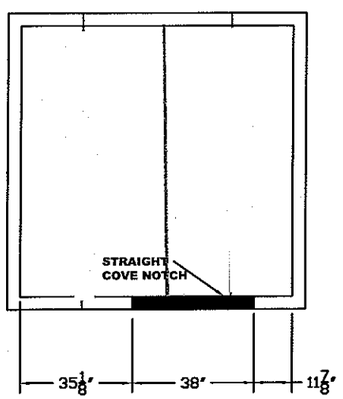

COVED FLOOR PLAN

WITH 14 GAUGE GALVANIZED FLOORS

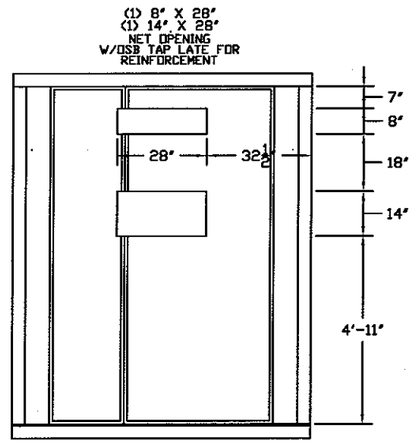

E 3 EXTERIOR ELEVATION

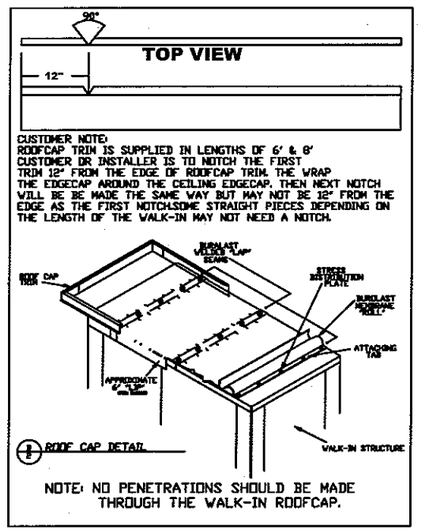

ROOF CAP DETAIL

NOTE: NO PENETRATIONS SHOULD BE MADE THROUGH THE WALK-IN ROOFCAP.

HARFORD PANELS ARE N.S.F. APPROVED (FILE #821) U.L. CERTIFIED (FILE #R8179). FACTORY MUTUAL LISTED (I.D. #OR3A1AND AND APPROVED FOR USE BY THE CITY OF NEW YORK (MEA FILE # 108-83-M).

ALL PANELS ARE 4" FOAMED-IN-PLACE URETHANE, 2.2 LB. DENSITY
K FACTOR 0.118, R30 INSULATION VALUE, CFC FREE

Finish: Interior - 20 GA EMB. WHITE GALV.
Exterior - 20 GA SMOOTH WHITE GALV.
Exterior CEILING - 20 GA SMOOTH GALV.
Ceiling Edgecaps - 20 GA SMOOTH WHITE GALV.
Interior Floor - 14 GA GALVANIZED

FLOOR TYPE: 4" THICK FLOOR WITH 14 GA GALV. FLOOR SURFACE WITH DOOR COVE. CAPABLE OF SUPPORTING 900 POUNDS PER SQUARE FOOT OF DISTRIBUTED WEIGHT. FLOOR WITH N.S.F. COVE.

DOOR: OPENING 38" X 85" NET OPENING W/ OLD STYLE GREY TRIM & WOOD REINFORCEMENT TO ASSUME #3070 1-¾" COMMERCIAL GRADE POLY INSULATED DOOR.

DOOR ACCESSORIES:

(1) DOOR RAIN SHIELD (ST/STL) 44" LONG
** CUSTOMER TO ADVISE DOOR HINGING **

GENERAL ACCESSORIES:

(1) BOTTLE OF TOUCH UP PAINT
(1) ROOF CAP ASSEMBLY- 4 SIDES OLD STYLE TRIM
TAPPING PLATE- FULL CEILNG PANEL (7/16" O.S.B.)
PREPARED REINFORCED OPENING TRIMMED IN ST/STL TO ASSUME WAVE GUIDE: 9 1/2" X 20 1/2"
PREPARED REINFORCED OPENING TRIMMED IN ST/STL TO ASSUME HVAC: 8" X 28" & 14" X 28"

IMPORTANT NOTE	THIS DRAWING IS:
VERIFICATION OF ALL DIMENSIONS, DOOR SIZE & LOCATION AND ALL PANEL FINISHES SHOWN ON DRAWINGS REQUIRED WITH APPROVAL, THIS ORDER WILL NOT BE SCHEDULED FOR PRODUCTION UNTIL APPOVED DRAWINGS ARE RECEIVED.	☐ APPROVED ☐ NOT APPROVED ☐ APPROVED AS NOTED ☐ RESUBMIT DATE_____ BY_____

NSF COMPONENT · UL CLASSIFIED · Factory Mutual System Approved

CUSTOMER REVISION NOTES:	DATE:

IT IS THE CUSTOMER'S RESPONSIBILTY TO MAKE SURE THAT ALL ELECTRONIC CHANGES ARE IN A BUBBLE. ALSO ALL CHANGES MUST BE NOTED IN THE REVISION BLOCK ABOVE.

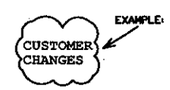

CUSTOMER NOTES

DO NOT USE TOP OF PANEL STRUCTURE FOR STORAGE

WE RECOMMEND 2" CLEARANCE BETWEEN WALK-IN PANELS & EXISTING WALLS TO PREVENT CONDENSATION.

PANELS MUST BE STORED IN A CLEAN DRY ENVIRONMENT PRIOR TO INSTALLATION.

WALK-IN FLOOR PANELS MAY BE SLIPPERY. KEEP FLOOR CLEAN & DRY.

HARFORD FLOOR PANELS SHOULD BE DAMP MOPPED. DO NOT HOSE.

IT IS THE CUSTOMERS RESPONSIBILITY TO VERIFY EXISTING WALL LOCATIONS & DIMENSIONS.

ALL PANELS MUST BE FLUSH & LEVEL AGAINST EACH OTHER BEFORE LOCKING MECHANISM CAN BE ENGAGED. SEE INSTALLATION MANUAL FOR DIAGRAM.

"KAMPS" LOCK MECHANISM IS METAL & SUBJECT TO FAILURE IF MOUNTED IN LOW TEMPERATURE BOXES

NOT DRILLING OR SPROCKET FLAME ASSOCIATED WITH WALK-IN PANELS WILL DAMAGE PANELS & IMMEDIATELY VOID PANEL WARRANTY

SYM	DATE	BY	REVISIONS

P.O. BOX 1025
2129 PULASKI HWY
ABERDEEN, MD
21001

1-800-638-7620
FAX
410-272-8508

HARFORD Duracool

JOB NO.	DMA439
CUSTOMER	Mobile System Integrators
PROJECT	-
DRAWN BY	ATL
SCALE	1/2" = 1'-0"
DATE	10/3/2007
SHEET	01 of 01
DWG. NO.	IA4390ID